REY1267 MODULAR WORKSTATION

STAINLESS STEEL CONSTRUCTION

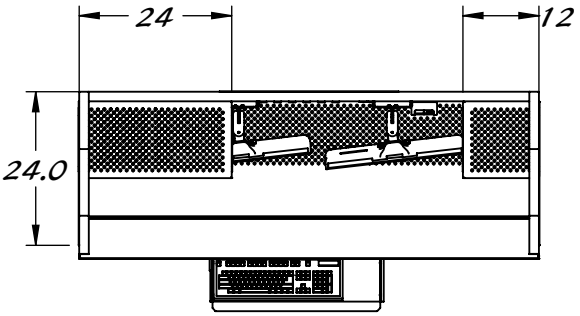

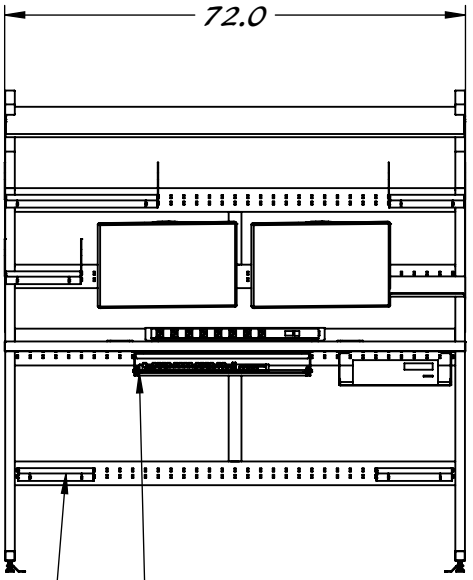

KEYBOARD CAN REPOSITIONED
RIGHT OR LEFT IN 2" INCREMENTS

PLATFORM CAN BE POSITIONED ALONG LOWER RAIL
IN 2" INCREMENTS

MONITOR MOUNTS FOR VESA STANDARD (75/100)
CAN BE POSITIONED ON EITHER HORIZONTAL RAIL
HORIZONTAL ADJUSTMENT IN 2" INCREMENTS

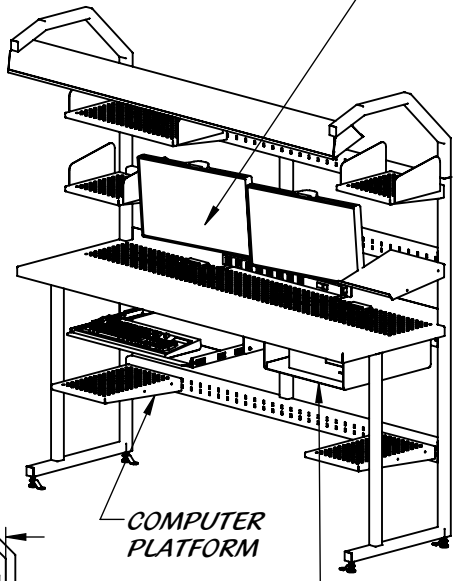

COMPUTER
PLATFORM

SHELF

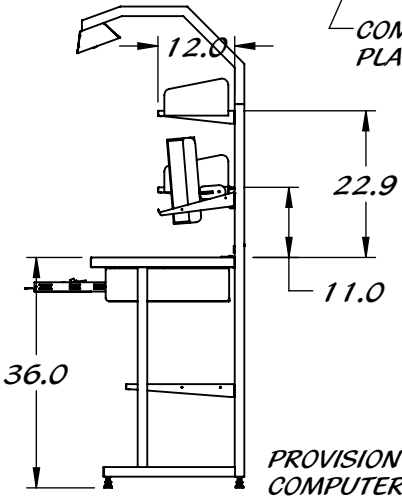

PROVISION FOR
COMPUTER MOUNTING HORIZONTALLY
BELOW WORK SURFACE ON SHELF
FOR MINI TOWER
OR VERTICALLY ON PLATFORM
FOR FULL SIZE TOWER

Property of Reytek Corporation.
Use of this information without the prior consent of Reytek Corporation is strictly forbidden.