REY1106 ADJUSTABLE STEP

STAINLESS STEEL CONSTRUCTION

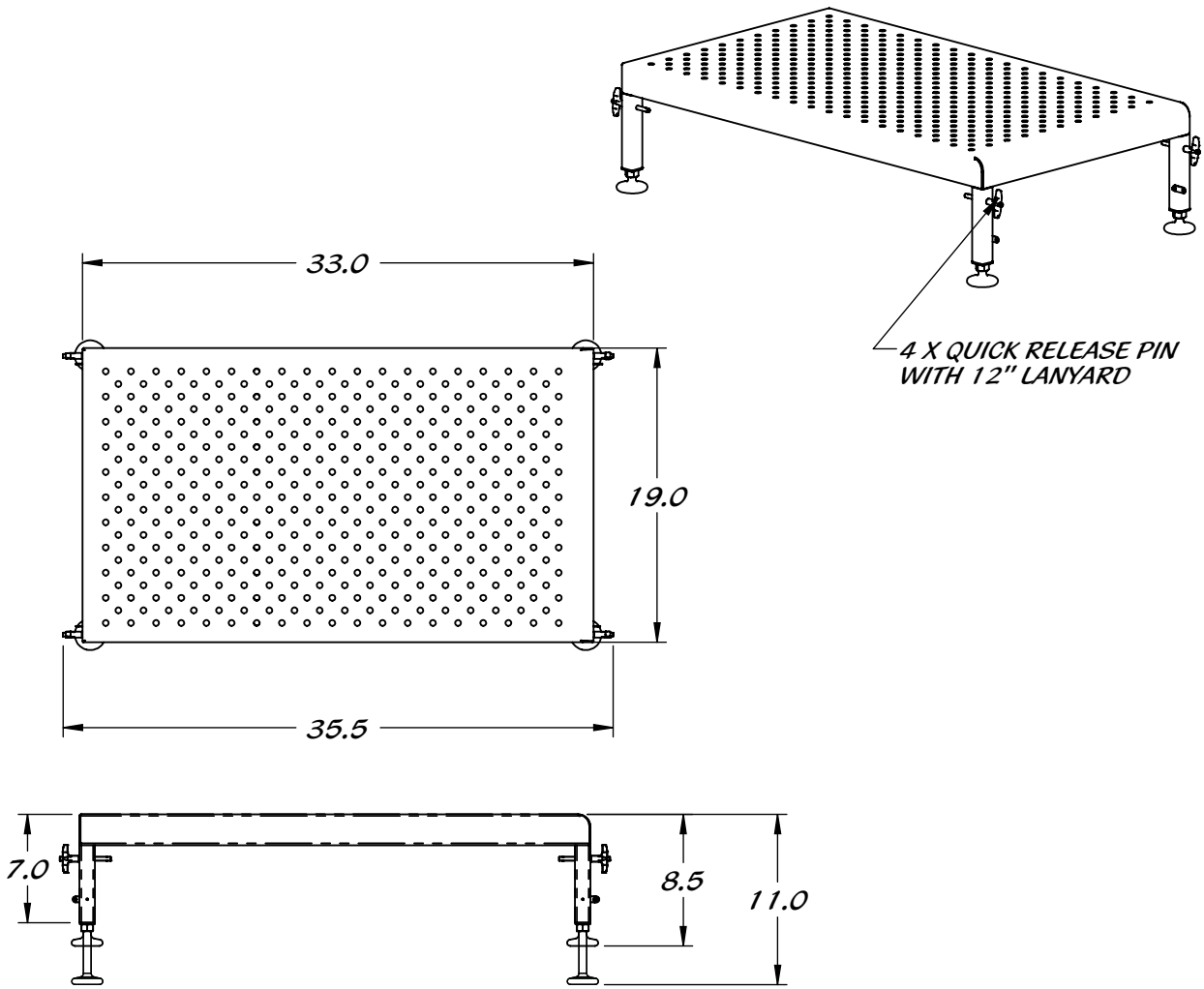

Property of Reytek Corporation.
Use of this information without the prior consent of Reytek Corporation is strictly forbidden.